C9T8 8oz Container (T8)

8oz T8 Paper Container-Double Poly

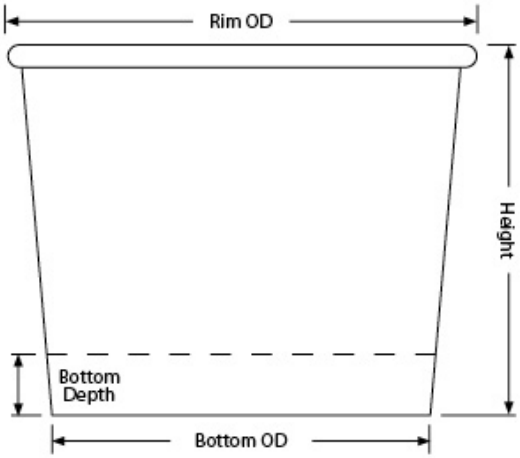

Capacity: 8.00oz / 237.00ml

Material: 16pt Paper, Poly 2-sides, FSC SFI PEFC Certified

Minimum: 1,000 pieces

Height: 2.634" ±.015

Rim Height: 0.150" ±.010

Rim OD: 3.321" ±.010

Bottom OD: 2.665" ±.010

Bottom Depth: 0.414" ±.010

Shipping: FOB NV

8oz Container (T8) available in Double-Poly Paper Vanish Plastic-Free Paper White Plastic

C9T8 Standard Case Pack Configuration

Box Dimensions: 17.33"x13.45"x22.83"
Box Volume: 3.08 Cubic Feet
Box Weight: 28 lbs
Box Content: 1,000 Pieces
Pallet Dimensions: 40.00"x48.00"x96"
Pallet Weight: 717 lbs
Pallet Content: 24,000 Pieces / 24 Boxes

SEE LID OPTIONS ON LAST PAGE

Specifications to be used for the evaluation and purchase of Visstun® products only and are subject to change without notice.
All orders are subject to 10% over to 10% under run. Exact quantities incur a 10% surcharge.

Pallet for C9T8

8oz T8 Paper Container-Double Poly

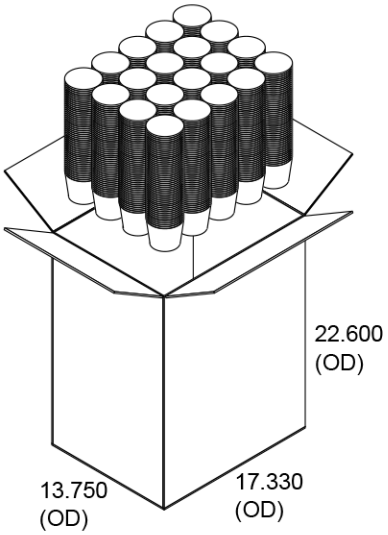

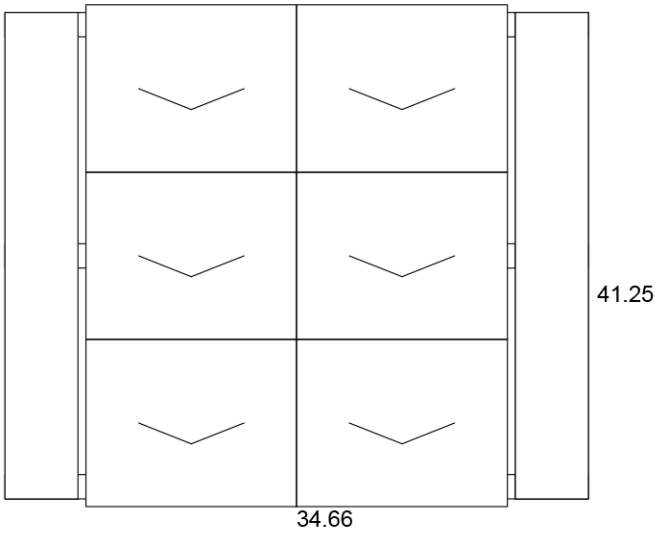

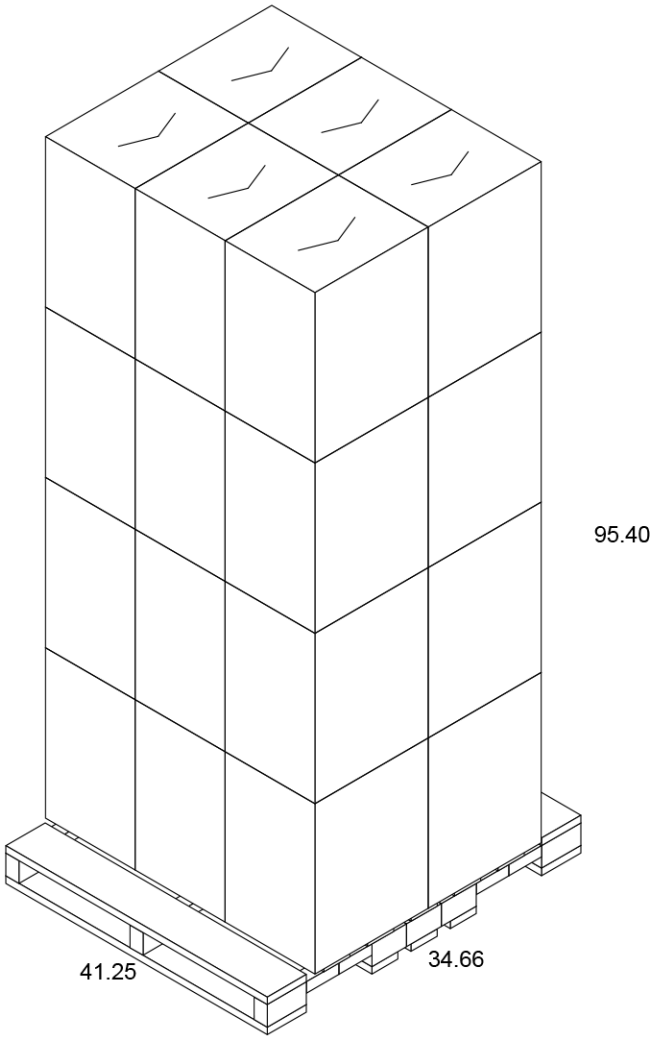

Lid Options for C9T8

8oz T8 Paper Container-Double Poly



P2 Printed Snap-Fit Paper

- Hi-Definition, Full Color
- Customizable
- Seamlessly registered text
- Uninterrupted text
- Two-four week leadtime
- Case: 500 - 9lbs



Clear Single-Use Lid

- Clear, thermo-formed
- Without straw slot
- Case: 1,000 - 6lbs



Clear High Dome Lid

- Clear, thermo-formed
- With no top opening
- Case: 1,000 - 11lbs